SafeLine

TTR manual

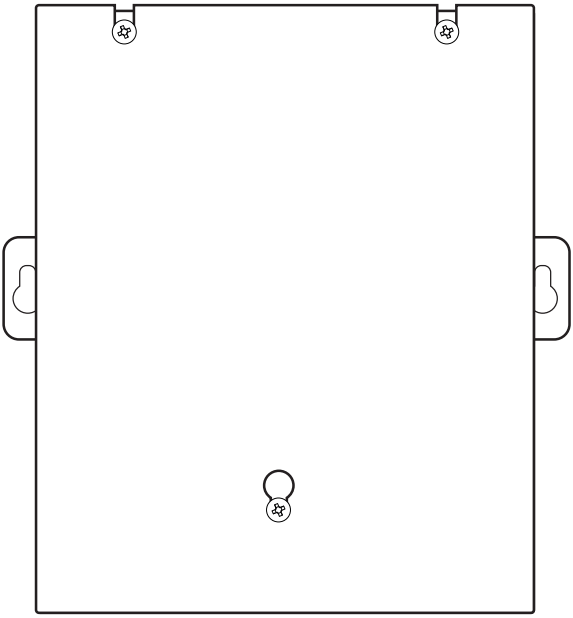

Communications system
www.safeline-group.com

Innovation brought to you from Tyresö Sweden

12.2021
SafeLine TTR v.2.2.0 EN

Technical data

Power:	Supply voltage: 230 VAC. Min: 3,9W , Max: 6,9W
Battery:	Battery voltage: 12V. Lead battery. Capacity: 0.8 Ah. Charge: 13.7-13.9 V, max. 200 mA.
Communication:	*****TTR-GSM - Supports 2G (900/1800 MHz) *****TTR-4G - Supports 2G, 3G and 4G (800/900/1800/2100/2600 MHz)
Emergency light:	Emergency light output: 12V max 0.5A. Acoustic emergency signal output: 12 VDC max 0.5A.
Inputs:	10-30 Volts; 5 mA. Optically isolated.
Pictogram outputs:	Max 200mA, 12VDC.
Size:	181,5 x 171,2 x 71 mm (L x W x H).
Weight:	1,5kg

This product is intended for use in EMEA countries.

Content

General information

This unit was built with state-of-the-art technology and to generally recognised safety related technical standards currently applicable. These installation instructions are to be followed by all people working with the unit, in both installation and maintenance.

It is extremely important that these installation instructions are made available at all times to the relevant technicians, engineers or servicing and maintenance personnel. The basis prerequisite for safe handling and trouble free operation of this system is a sound knowledge of the basic and special safety regulations concerning conveyor technology, and elevators in particular. The unit may only be used for its intended purpose. Note in particular that, no unauthorised changes or additions may be made inside the unit or individual components.

Exclusion of liability
The manufacturer is not liable with respect to the buyer of this product or to third parties for damage, loss, costs or work incurred as a result of accidents, misuse of the product, incorrect installation or illegal changes, repairs or additions. Claims under warranty are likewise excluded in such cases. The technical data is the latest available. The manufacturer accepts no liability arising from printing errors, mistakes or changes.

Declaration of conformity
Download "The declaration of conformity" at our website: www.safeline-group.com

Safety Precautions!
- Only trained professionals, who are authorised to work on the equipment, should install and configure this product.

- This quality product is dedicated for the lift industry. It has been designed and manufactured to be used for its specified purpose only. If it is to be used for any other purpose, SafeLine must be contacted in advance.

- It should not be modified or altered in any way, and should only be installed and configured strictly following the procedures described in this manual.

- All applicable health and safety requirements and equipment standards should be considered and strictly adhered to when installing and configuring this product.

- After installation and configuration this product and the operation of the equipment should be fully tested to ensure correct operation before the equipment is returned to normal use.

Electrical and electronic products may contain materials, parts and units that can be dangerous for the environment and human health. Please inform yourself about the local rules and disposal collection system for electrical and electronic products. The correct disposal of your old product will help to prevent negative consequences for the environment and human health.

Introduction

TTR Alarms

Please read the following information, as it contains important information about differences between TTR and other emergency-alarm telephones.

General:

- Telephone in machineroom must be connected to the RJ12 jack on the front of the TTR unit.
- RJ12 jack next to the 14 pin connector is for the microphone, alternatively microphone and external speaker (sold separately).
- The emergency button's function (NO or NC) is set by the jumpers on the TTR board (not autodetect).
- Install jumpers on the TTR board, so they stand as the unit which is replaced (same jumper names).
- Remember to attach the unit, and tighten the screws in the lid to avoid the device to "rattle".
- The battery is disconnected at delivery and must be connected when the TTR is installed.

If using emergency lights:

- To provide 1 hour of emergency lights, the TTR should not be loaded with more than 3-5W (replace 10W halogen pin bulb with a 5W bulb)

If using pictograms:

- Pictograms are active +12 V, ground (0V) is connected to terminal input 7 (not terminal input 5)
- Remember to activate TTR's relays as pictograms (* 88 * 1 #)

If using extra station under the car or in the shaft:

- There should be installed an extra board (SL3000-XRemBoard).

Component list

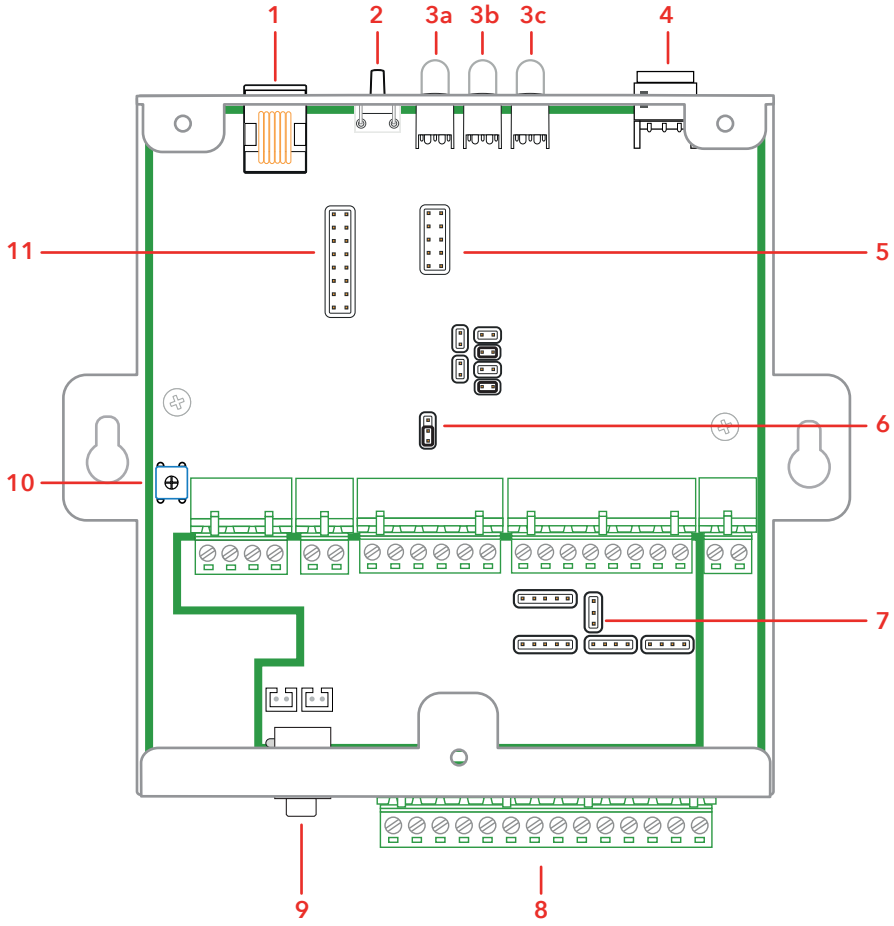

Component list

1. **Connector RJ12 for optional telephone handset**
   For programming and intercom communication. Can also be used for external calls. Any standard analogue tone dial telephone can be connected.

2. **Reset button**
   - Reset all alarms.
   - Terminates a phone call in progress.
   - Triggers manual battery check
   - Activates display of GSM signal quality.
3. **LED indicators**
   3a Mains power
   3b Active alarm / Battery status
   3c PSTN / GSM Net / Call status

4. **RS232 PC connection**
   For firmware update and configuration.

5. **Slot for optional extra station card**
   Two supplementary microphone/speaker units can be connected for the car roof and/or in the lift pit. When the station's alarm button is pressed for the set delay time, an emergency call is emitted. The recorded message can be different for each unit.

6. **Jumpers for emergency button**
   Selects NO/NC for the emergency button

7. **Jumpers for pictogram, emergency light and sounder**
   The outputs from the SafeLine TTR can be configured by use of the jumpers J8 and J9 to activate pictograms emergency light and sounder switch.

8. **Terminals**

9. **Microphone input**

10. **Volume control**
    For loudspeaker in car. Turn right to increase the volume.

11. **Slot for PSTN or GSM card**

Component list

PSTN card

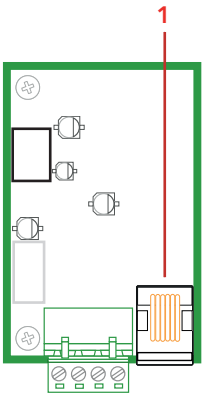

GSM/4G card

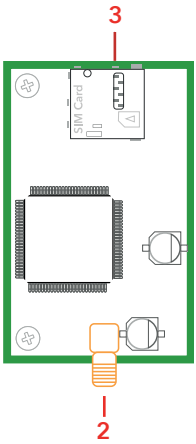

Extra station card

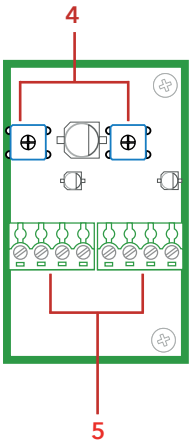

GSM Antenna

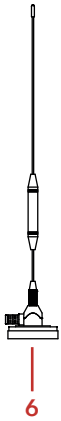

1. **Terminal or RJ12 connector for PSTN line.**
   Internal connection of PSTN line.
2. **GSM antenna connection, SMA**
3. **SIM-card holder**
4. **Volume controls**
   For the extra remotes. Turn right to increase the volume.
5. **Terminals**
   For the extra remotes.
6. **GSM antenna**

Installation

Mounting

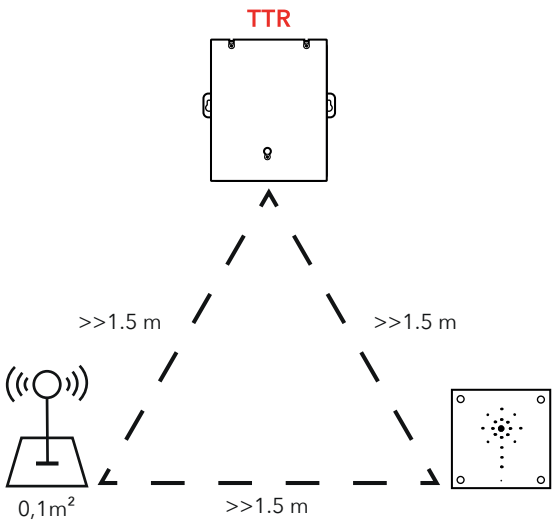

Unplug the main power and battery before performing any changes. To avoid GSM interference: Place the main unit, the stations and the GSM antenna more than 1.5 meters apart.

Mounting interface boards

GSM/4G

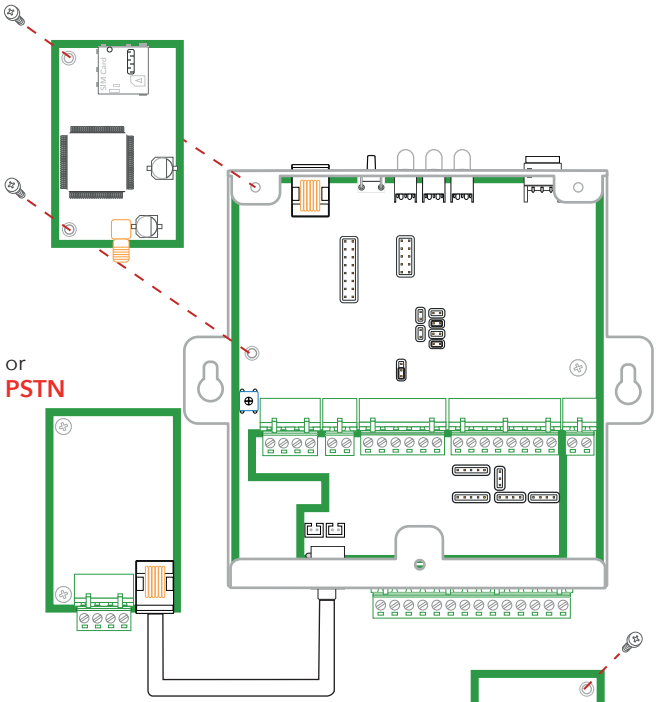

or

PSTN

Extra station card

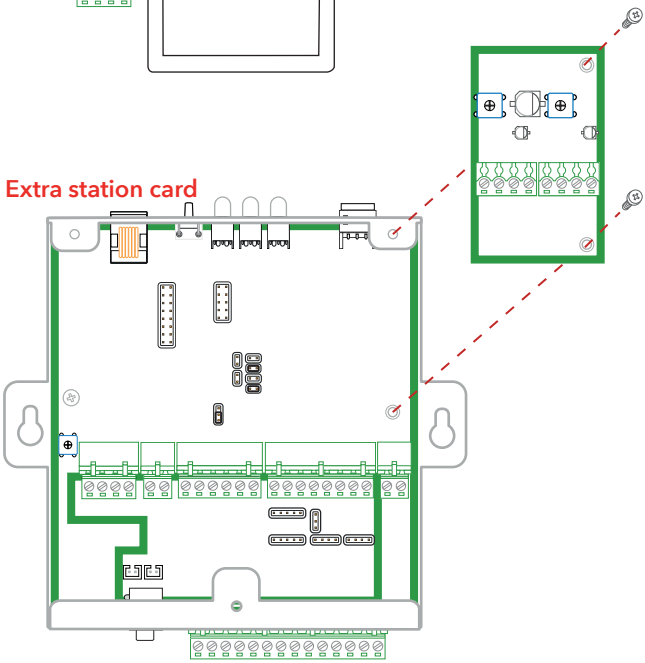

Wiring diagram, emergency bell and light

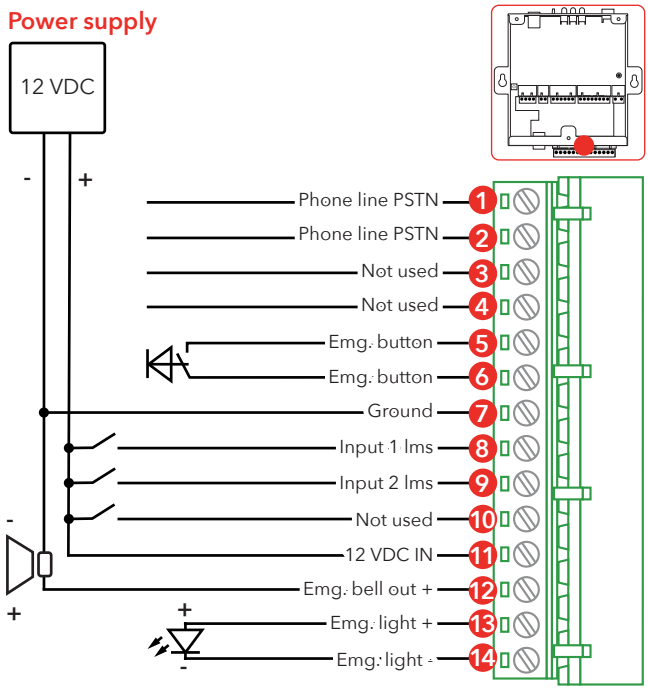

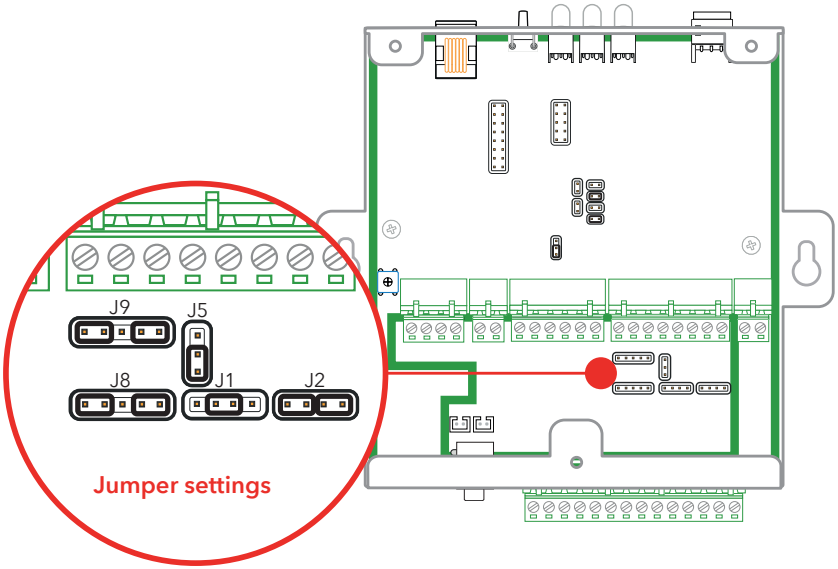

With the jumpers "J8" and J9 in the position as shown left, the SafeLine TTR can supply backup power for emergency light in the lift car.
The jumpers "J1", "J2" and "J5" shall be set as shown left and shall not be changed.

Wiring diagram, emergency bell and pictograms

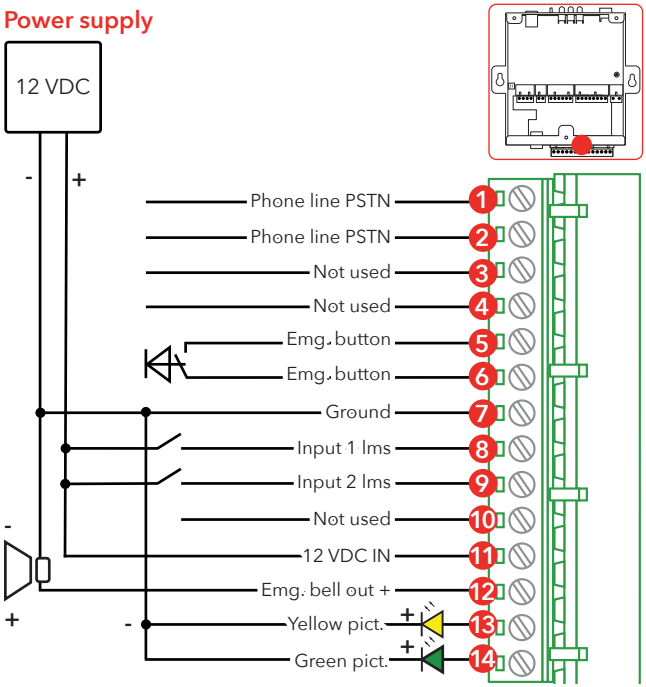

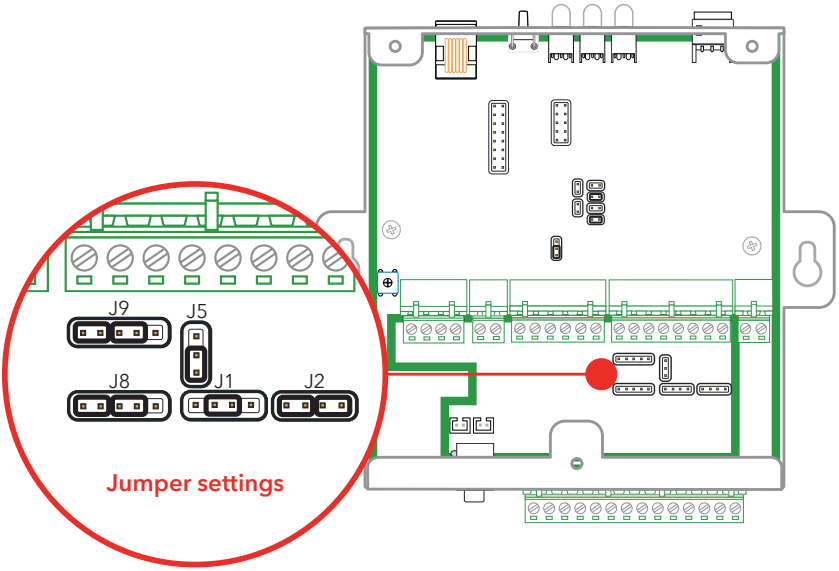

With the jumpers "J8" and J9 in the position as shown left, the SafeLine TTR can operate pictograms according to EN 81-28 / EN 81-70.
The jumpers "J1", "J2" and "J5" shall be set as shown left and shall not be changed.

Wiring diagram, emergency light and pictograms

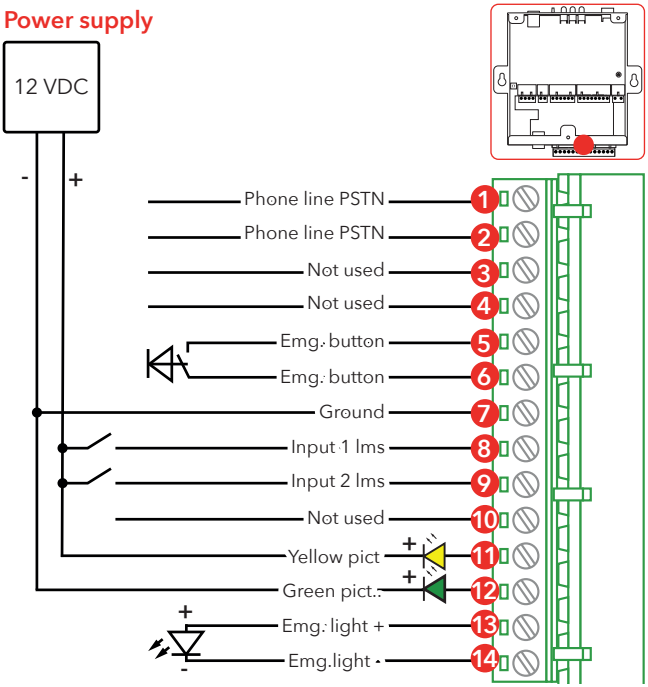

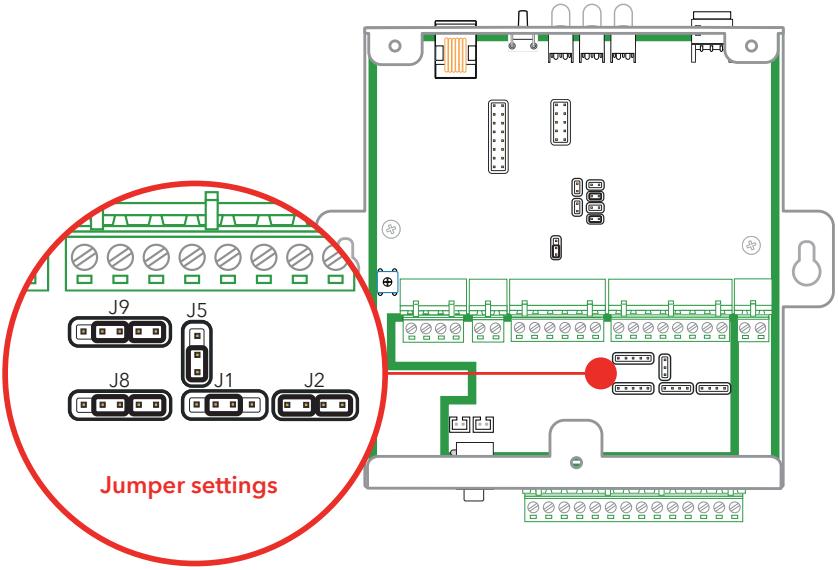

With the jumpers "J8" and J9 in the position as shown left, the SafeLine TTR can sypply backup power for emergency light in the lift car.
The SafeLine TTR can also operate pictograms according to EN 81-28 / EN 81-70. The jumpers "J1", "J2" and "J5" shall be set as shown left and shall not be changed.

Wiring diagram, extra station card

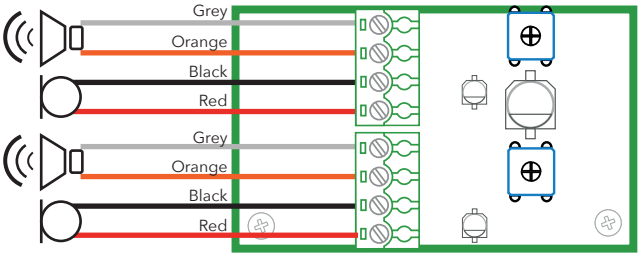

Wiring diagram PSTN Line (max 9 units)

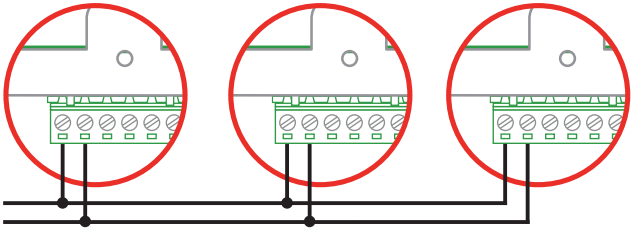

Connect the telephone line in parallel according to the picture above. It's possible to connect up to 9 SafeLine TTR units to the same telephone line.

Network services

Only applicable for *TTR and *TTR-GSM: Before you can start using a new SIM card, the card has to be prepared and support 2G network. Cards that only support 3G and/or 4G will not function.

Only applicable for *TTR-4G: Network services may differ from country to country and/or service providers. Contact your service provider for more information about 4G and VoLTE in your specific region.

Activating the SIM card

NOTE! If you enter the wrong PIN code 3 times, the SIM card will be blocked (requires PUK code to unblock). The SafeLine TTR can not be started and the LED (3) will turn red.

- The SafeLine TTR can only recognize the PIN code if the code is set to "1234", "0000", "1111". In some cases the code can also be deactivated. If the PIN code is set to "1234", "0000" or if it is deactivated the SIM card can be moved from the SafeLine TTR to any of SafeLine GSM products.
- If the Pin code is set to "1111" the SIM cards code will be randomly changed by the SafeLine GSM unit and memorized. This way the SIM card can only work with the SafeLine GSM unit unless you use the PUK code for setting up a new PIN code.
- The randomly chosen PIN code is memorized by the unit. If you want to upload a new SIM card with PIN code "1111" you will need to first upload a SIM card with PIN code "1234" or "0000" this to clear the old code in memory.

PIN code (set to "1234", "0000" or deactivate).

1. Insert the SIM card in an ordinary cellular phone. In the "Security settings" menu, change the PIN code to "1234". If this is not possible, set the PIN code to "0000" or set the "PIN code request" option to "OFF". (Might not always function)
2. Verify the PIN code by switching your phone off and on again.
3. Make a call from your phone to verify that the SIM card is active, before you move it to the SafeLine TTR.
4. Also make a call to SafeLine TTR after insertion to check that it is possible to get a proper connection.

LED indication

LED 1 indicates the power supply status:

Continuous green	Mains power supply OK.
Flashing red	Battery operated, with power to the emergency light.
Continuous red	Battery operated, no power to the emergency light.

LED 2 indicates battery condition:

Light off	No Active alarm / Battery OK.
Flashing red	Battery check in progress.
Continuous red	Battery test failure.
Rapidly flashing Yellow	Active alarm not reset.

LED 3 indicates the phone line's status:

Slowly flashing green	GSM network OK.
Flashing green	Call connection in progress.
Continuous green	Call connected.
Flashing yellow	Incoming call.
Flashing red	Searching for GSM network.
Continuous red	No SIM card or network (when using GSM).

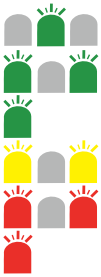

Reset button:

Hold for 4 sec	Show GSM signal strenght.
Press 3 times	Start a battery condition test.
Press once	Resets an active alarm. Aborts calls in progress.

LED 1	LED 2	LED 3	Signal strength
			= 100%
			>= 85%
			>= 70%
			>= 55%
			>= 30%*
			>= 15%
			>= 0%

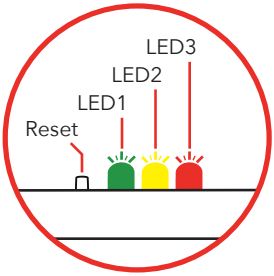

*Minimum signal strenght for using GSM Interface

LED indication

	Yellow LED	Green LED
	Call in progress The Yellow Pictogram LED, is lit as soon as the alarm button is pressed longer than the set delay.	**Call connected** The Green pictogram LED turns on as soon as the SafeLine unit detects a responding voice. The LED is turned off when the call is terminated.

Standard (*78*0#)	Yellow LED	Green LED
Light off	No alarm activated	Telephone line not OK.
Flashing slowly	**Flashing once every 5 seconds** Telephone line not OK.	**Flashing once every 5 seconds** Unit is OK.
Flashing quickly	**Flashing twice every second** Alarm button active.	**Flashing two times every 5 seconds** Alarm filter activated.
Continuous light	Activated alarm. Remains lit until reset.	Call connected.

Strictly EN81-28 (*78*1#)	Yellow LED	Green LED
Flashing	**Flashing twice every second** Alarm button active.	
Continuous light	Activated alarm. Remains lit until reset.	Call connected.

Test procedure after installation

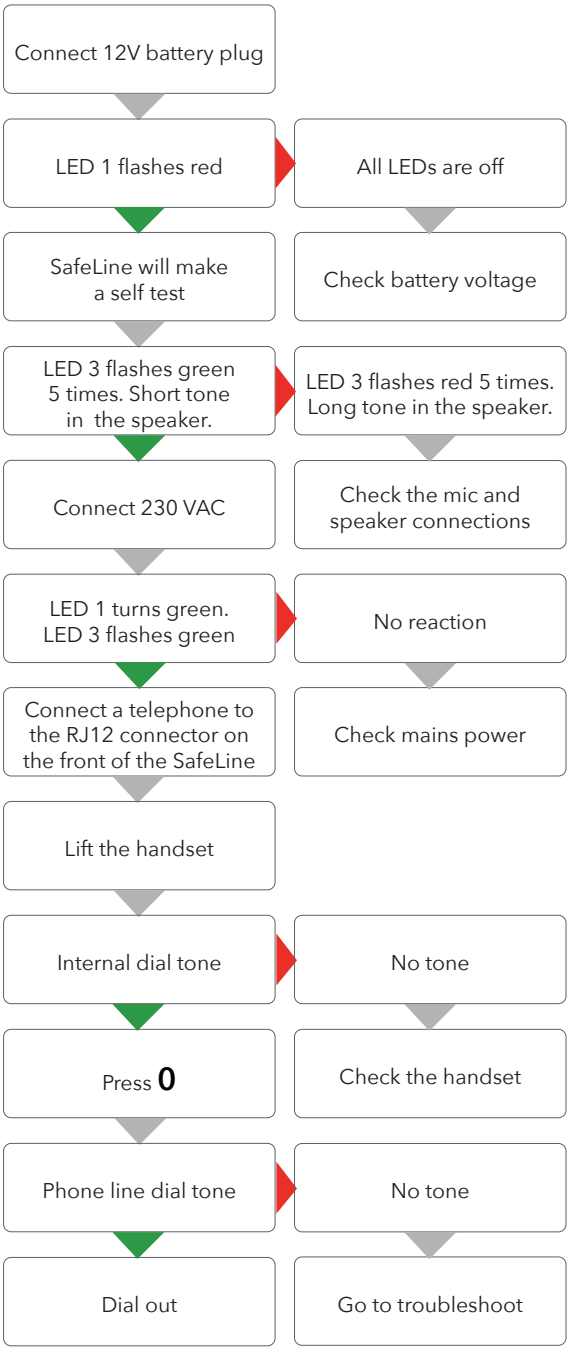

Configuration overviews

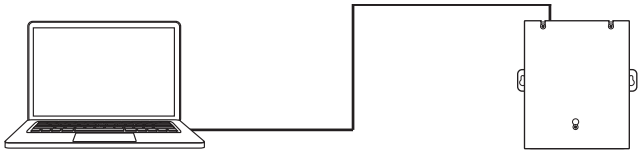

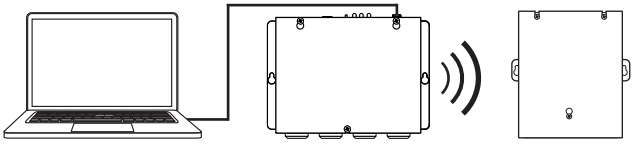

Configuration with PC

To configure the unit using SafeLine Pro, download the SafeLine Pro software to a laptop computer from safeline-group.com and make sure you have the required programming cable. Connect the computer to the unit and start configuration using the software.

Configuration of the unit can also be done remotely using SafeLine ProLink (*PROLINK).

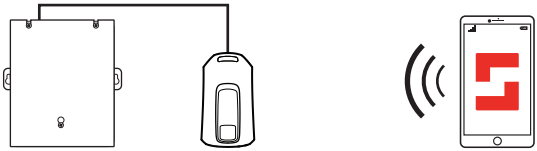

LYNX app

To configure the unit through the LYNX app, the CONNECTable (*CONNECTABLE) is required. Plug in CONNECTable through the unit's serial port and configure the unit through the app just like any other unit. The TTR is presented as "SL3000" in LYNX.

Configuration overviews

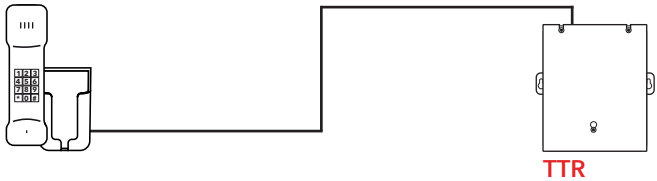

On site configuration with telephone.
For configuration, you can use any PSTN tone dial phone. Plug the handset into the plug of the main station. Enter function codes on the handset keypad.

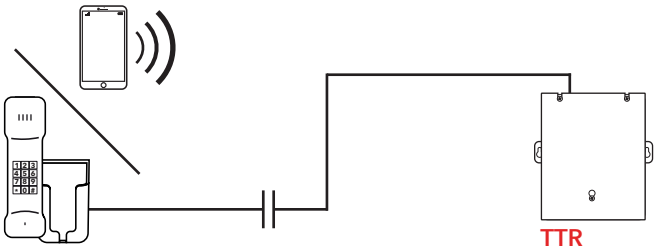

Remote configuration with telephone.
For remote configuration, you can use any PSTN tone dial phone. Dial the phone number of the SafeLine. Enter the function codes on the phone keypad to start configuration (password has to be entered).

Remote Config. with telephone first step

In order to remotely configure the SafeLine, the unit must first be put into configuration mode via voice communication mode. To enter voice communication mode, refer to the instructions below.

After the unit has been set in voice communication mode, follow the steps for remote configuration on the next page.

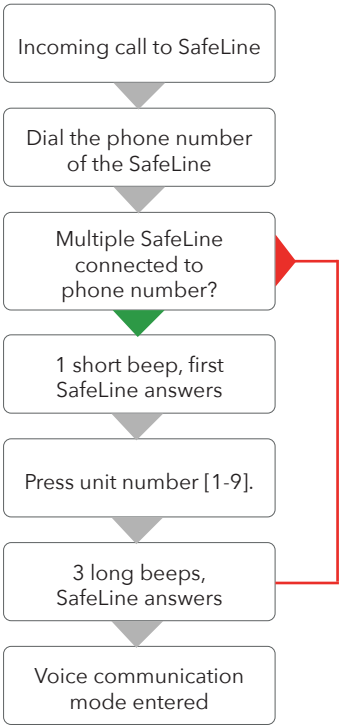

1. Dial the phone number of the units phone or GSM subscription.
2. If there is only one unit connected, the unit answers with 3 long tones. If there are multiple units connected, the unit answers with a short beep. If there are more than one unit connected to the phone number, use the unit number to communicate with the selected unit.
3. After 2 rings the unit answers with a short beep.
4. If multiple SafeLine TTR units connected in parallel you have to press the unit number just once. If there are other units (E.G SafeLine 3000, MX2)
5. When 3 long tones are heard, the selected unit are reached and voice communication mode is established. Now the telephone beeps every 5 seconds.This is to notify the passengers of the ongoing call (anti eaves dropping). connected in serial you may have to press the unit number several times before the 3 long tones are heard.

Remote Config. with telephone second step

If the time between the operation of two keys exceeds 10 seconds, the code has to be reentered. If the time exceeds 30 seconds, the call is disconnected or configuration mode is ended.

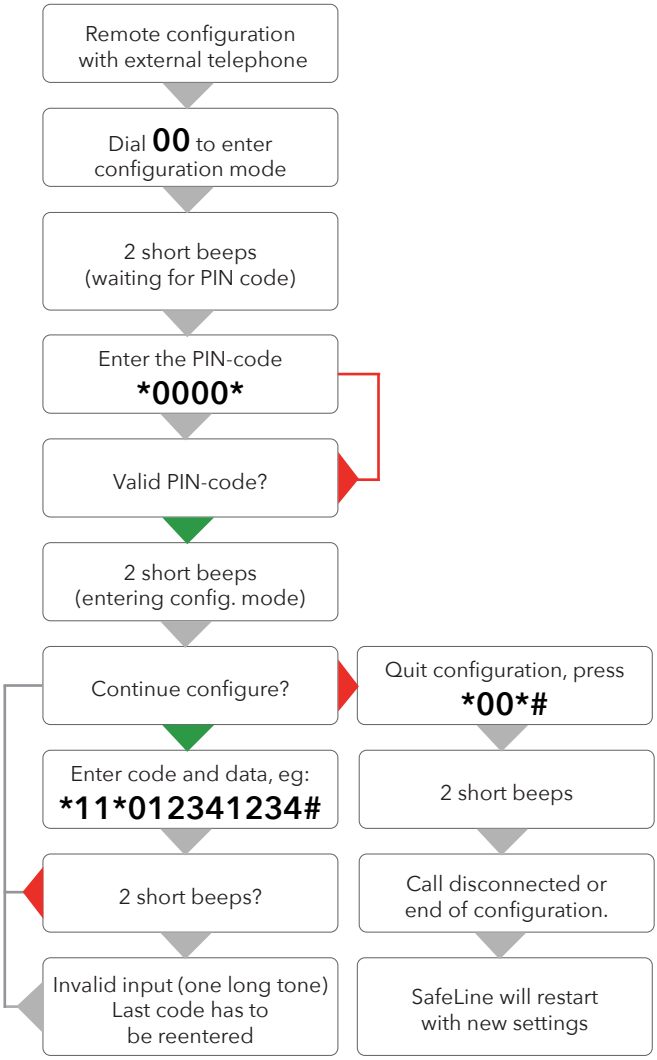

On-site configuration with telephone

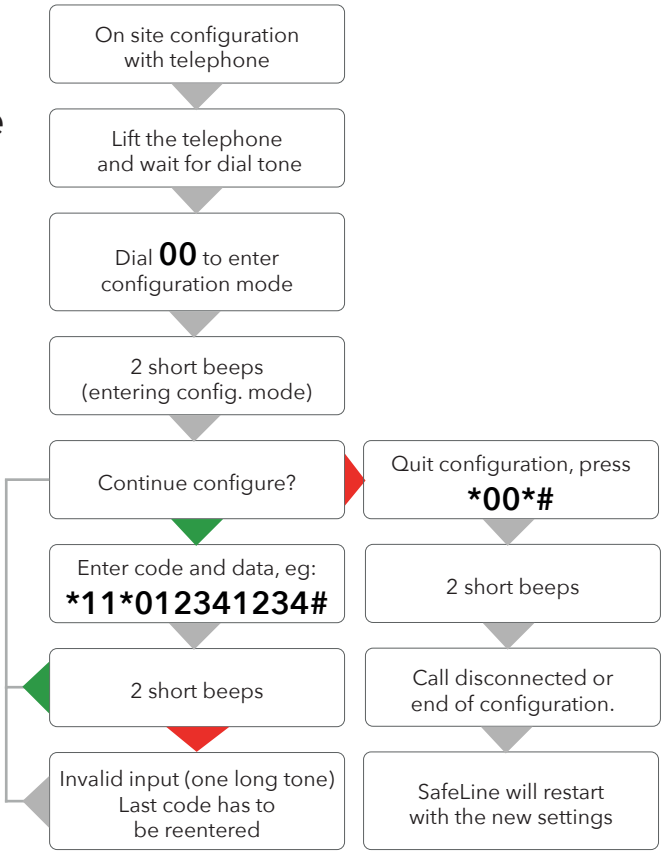

Configuration example

Refer to the "Configuration methodes" chapter before reading this example, to know how to get started.

The example will assign the following settings to the SafeLine SL6:

- ID code for P100 protocol to 12345677.
- First phone number to emergency call centre to 42345688.
- Second phone number to emergency call centre to 45645699.
- Phone number for test alarm to 42345600.
- Send test alarm every third day.
- Test alarm protocol to P100.
- Alarm button delay to 10 seconds.

1. Start configuration:
   00
2. Enter P100 ID code:
   ***01*123456**
3. Enter the first telephone number:
   ***11*423456**
4. Enter the call type for first telephone number:
   ***21*0#**
5. Enter the second telephone number:
   ***12*456456**
6. Enter the call type for second telephone number:
   ***22*0**
7. Telephone number to test alarm receiver:
   ***17*4234**
8. Enter number of days between test alarm:
   ***27*03#**
9. Set test alarm protocol to P100:
   ***31*0#**
10. Enter alarm button delay:
    ***87*10#**
11. End configuration:
    ***00*#**

Configuration codes table

Programming data	Code	Data	Comments
Enter programming mode		00	
Enter password		* - - - - #	Default = 0000
Exit programming mode		*00*#	

Alarm codes	Code	Data	Comments
P100 ID code	*01*	- - - - - - - - #	P100 is always 8 digits
CPC ID code	*02*	- - - - - - #	CPC 6-8 digits
Q23 ID code	*03*	- - - - - - - - - - - - #	Q23 is always 12 digits

Telephone numbers	Code	Data	Comments
1st Phone number	*11*	- - - - - - - - - #	Phone number to alarm receiver 0-16 digits. If calling through a switch board, delay time can be set by adding asterisks between leading number and telephone number. Each asterisk is equal to one second delay. **Example:** *11*(0)**1234567#
2nd Phone number	*12*	- - - - - - - - - #	
3rd Phone number	*13*	- - - - - - - - - #	
4th Phone number	*14*	- - - - - - - - - #	

Call type	Code	Data	Comments
Call type 1st number	*21*	- #	Change call type 1-4:th number: 0 = P100 1 = VOICE (Default) 2 = Q23 3 = CPC Change this only if your alarm operator is using any of the mentioned protocols.
Call type 2nd number	*22*	- #	
Call type 3rd number	*23*	- #	
Call type 4th number	*24*	- #	
Call type LMS number	*30*	- #	LMS(Lift Monitoring System) call type 0 = P100 3 = CPC (Only battery alarm)

Test alarm/battery alarm	Code	Data	Comments
LMS phone number	*16*	- - - - - - - - - #	LMS(Lift Monitoring System) phone number to alarm receiver / SLCC
Test alarm	*17*	- - - - - - - - - #	Phone number to test alarm receiver/SLCC
Days between tests	*27*	- - #	Number of days between test alarms, 00-99 days. Always two digits. Max 3 days according to EN 81-28. 00 = No test alarms
Test alarm protocol	*31*	- #	Protocol test alarm 0 = P100 3 = CPC 4 = Phone number used as ID.

Alarm character	Code	Data	Comments
Alarm character 1st number	*41*	- - #	Alarm character. only when using CPC as alarm protocol normally 10 or 27 check with your alarm company !
Alarm character 2nd number	*42*	- - #	
Alarm character 3rd number	*43*	- - #	
Alarm character 4th number	*44*	- - #	
Alarm character LMS	*45*	- - #	LMS (Lift Monitoring System) (Battery alarm) Normally 17
Alarm character Test alarm	*46*	- - #	Normally 26

Distress message	Code	Data	Comments
Record distress message played in the lift car.	*51*	"Speak" #	This message will be played in the lift cabin when the emergency lift telephone starts calling the alarm centre. Make sure that there is no noice in the background when recording the message. Example of message: Please do not panic, the emergency telephone is now calling the emergency call centre.
Record alarm message from Lift Car to alarm central	*52*	"Speak" #	This message will be played to the alarm receiver and in the car when the call is answered. Make sure that there is no noice in the background when recording the message. Example of message: This is an alarm from the lift on 5th avenue. To hear the quality of the message, press "1". To terminate the call press "#".
Record alarm message from car top to alarm central	*53*	"Speak" #	
Record alarm message from Lift pit to alarm central	*54*	"Speak" #	

Distress message	Code	Data	Comments
Options for the recorded distress message	*61*	- #	0 = Disable recorded message. 1 = Enables recorded message.
	61	#	Play the the recorded message.
Options for the recorded message from lift car	*62*	- #	0 = Disable recorded message. 1 = Enables recorded message.
	62	#	Play the the recorded message.
Options for the recorded message from top of car	*63*	- #	0 = Disable recorded message. 1 = Enables recorded message.
	63	#	Play the the recorded message.
Options for the recorded message from lift pit	*64*	- #	0 = Disable recorded message. 1 = Enables recorded message.
	64	#	Play the the recorded message.

Other codes	Code	Data	Comments
Buzzer	*71*	- #	The buzzer will sound at incoming call or at intercom use. 1 = On (Default) 0 = Off
Ring-tone timeout	*72*	- - #	Number of ring signals before dialling the next number. (Default = 8)
Hot Line	*75*	- #	Phone connects directly to a fixed receipient without dialling a phone number 0 = Standard phone line (Default) 1 = Hotline
Maximum communication time	*79*	- #	1 - 20 minutes. (Default = 8 min)
Reset active alarm	*80*	- #	0 = OFF, 1 = ON (Default)
Auto answer	*81*	- - #	No of signals before SafeLine answers incoming call. Can be set from 00-16. 00 = Never answering. (Default = 02)
Unit number	*82*	- #	Program Unit number [0-9], when units share phone line.
Detect dial tone	*83*	- #	0 = Off 1 = On (Default) Set to off if SafeLine has problem to detect the dial tone.

Other codes	Code	Data	Comments
Receipt to alarm receiver	*84*	- #	Select which message(s) to send to the alarm receiver at an alarm call. 0 = None (Default) 1 = Start of alarm 2 = Start+end of alarm
Local button	*85*	- #	Used if car stations has built in alarm button. 0 = OFF 1 = ON (Default)
Break on new alarm	*86*	- #	Disconnects a call longer than 60 seconds at new activation of the alarm button and calls the next emergency call number. 0 = OFF 1 = ON (Default)
Alarm button delay time	*87*	- - #	Delay time from pressing the alarm button until activating the alarm. 00-25 seconds. Default = 10.
Outputs	*88*	- #	**0 = Standard (Default)** Relay 1 will be activated when set time reached. Relay 1 will be deactivated when emergency call ends. Relay 2 will be activated when the battery test has failed. Relay 2 will be deactivated by pressing the reset button. **1 = EN81-28 Pictograms** Relay 1 will be activated when the emergency button in pressed (yellow pictogram). Relay 1 will be deactivated when the reset button is pressed or if alarm centre presses "5". Relay 2 will be activated when the call is acknow-ledged (green pictogram). Relay 2 will be deactivated when the call is discon-nected. **2 = DTMF-controlled** The relays can be activated remotely for 5 seconds. Relay 1 will be activated for 5 seconds when DTMF "8" is pressed. Relay 2 will be activated for 5 seconds when DTMF "9" is pressed. **3 = Manual - ECF** Relay 1 will be activated when set delay reached. Relay 1 will be deactivated when the reset button is pressed.

Other codes	Code	Data	Comments
Change password	*91*	- - - - #	Change password (default=0000)
Simulate an alarm event	*94*	- #	Triggers an alarm event after programming is terminated. 1 = Emergency call 2 = Test alarm 3 = Battery failure 4 = Microphone/Loudspeaker failure 5 = Emergency call 6 = Maintenance 7 = Main unit power failure 8 = Stuck button
Reset to default settings	*99*	- #	1 = Factory default 2 = Default P100(The following codes will be set): *21*0#, *22*0#, * 27*03#, *80*1#, *84*1#, *88*1# 3 = Default CPC(The following codes will be set): *21*3#, *22*3#, *27*03#, *80*1#, *84*1#, *88*1# 4 = Default VOICE(The following codes will be set): *21*1#, *22*1#, * 27*03#, *80*1#, *84*1#, *88*1#
Compatability mode	*77*	- #	**0=Automatic voice switching** The call is validated when there is a voice response. The call is terminated by pressing "#". **1=Kone ECII (lift telephone)** When there is a voice response, some ascending tones will be heard. The call is validated by pressing "4". The call is terminated by pressing "0". The call is terminated without reciept notification by pressing "2"(the unit will call the next number). **2=Manual voice switching** When there is a voice response, some ascending tones will be heard. The call is validated by pressing "4". Unit is still in automatic mode. To enter manual mode and talk press "*". To listen press "7". Go back to automatic mode press "4". The call is terminated by pressing "#". It is possible to enter manual voice switching mode although the unit is programmed as automatic by pressing "*". No ascending tones will be heard.

Calling with SafeLine TTR

The TTR can call in the following ways:

1. Intercom between machine room and car/pit/car-top, see below.
2. Make calls with a normal fixed phone line and through GSM.
3. Emergency calls to numbers at the press of the alarm button.
4. Test alarms at preset intervals.
5. Send receipts to SLCC alarm receiver for defined conditions.
6. Send SMS to one or several GSM phones at defined conditions (GSM only).
7. Provoke test calls.

Programming mode

Press 00 to enter programming mode.

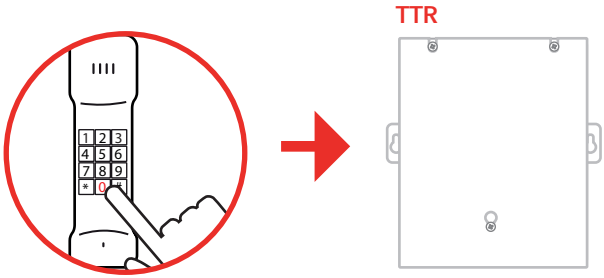

Intercom between machine room & car/pit/Top of car

Press 2 to call the car-top.

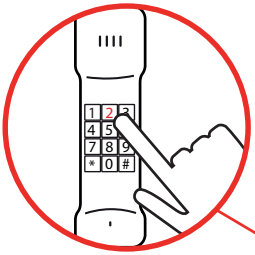

Press 1 to call the lift car.

Press 3 to call the lift pit.

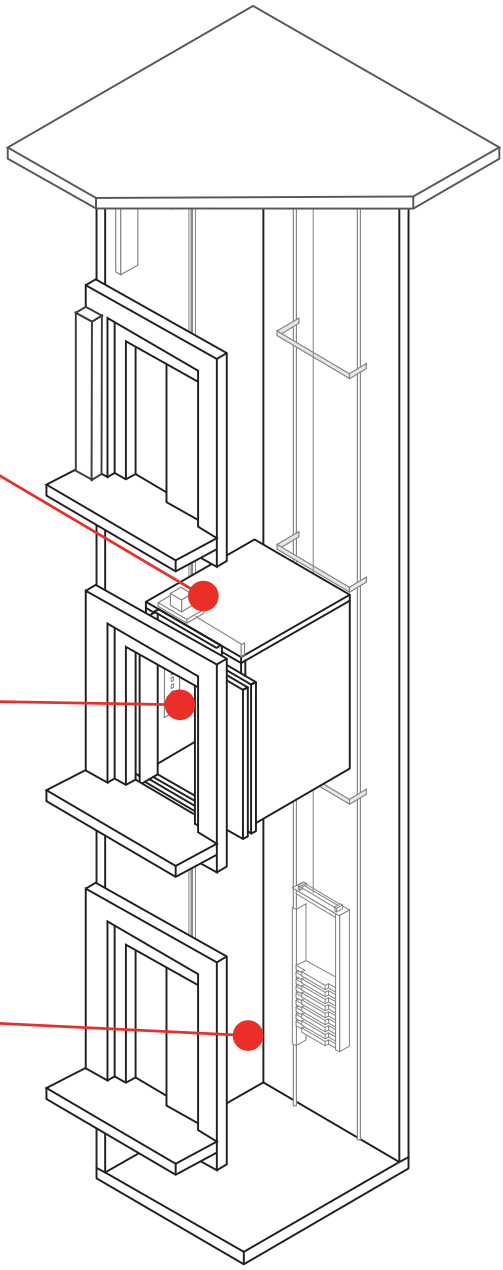

Emergency calling process

With 4 stored telephone numbers in the system, each number can be called 3 times. This adds up to the 12 call limit.

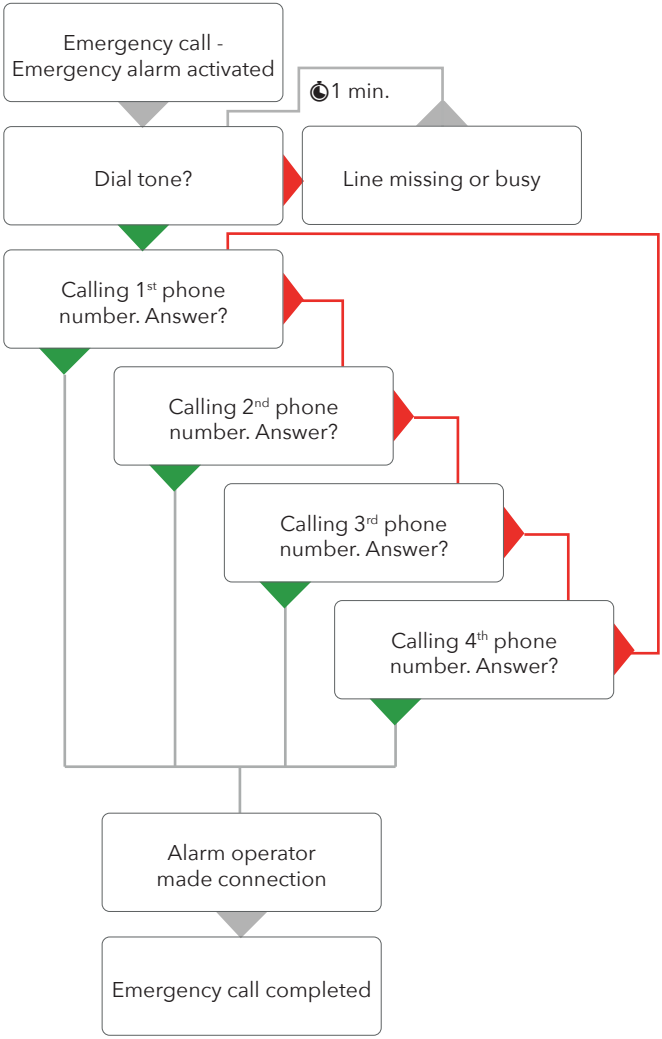

Battery function

The expected life of a lead battery is approximately 3 years, but several factors can affect the battery's life time, E.g.:

- Ambient temperature.
- Humidity.
- Long time storage of the battery before powering.
- If the battery has been completely discharged for a longer period of time, it will never regain full capacity.

Battery status check

- An automatic battery status check is carried out every 7 days.
- If so configured, when the battery test fails, a battery alarm will be emitted to an alarm receiver.
- If so configured, relay 2 will be activated when the battery test has failed and can be reset by pressing the reset button,when using the relay default settings.

Battery test

- If the reset button is pressed 3 times within 2 seconds, a battery test will be performed. The battery test takes about 20 minutes.
- If the battery is low, the test will be cancelled and LED 2 and the battery alarm relay is activated when using the relay default settings.

Mains power failure

- If so configured, the Mains power failure alarm is sent to the alarm receiver (SLCC) after 15 minutes of mains power failure.

Testing the battery alarm:

- Unplug the battery contact during the battery status check.
- The SafeLine TTR will now emit a battery alarm and LED 2 and the battery alarm relay will be activated (if so configured).

Cancelling the battery test:

- Switch the main voltage supply (230 V) off and back on to cancel the test.
- If the battery needs to be changed, the "battery Alarm" LED will light.
- The alarm can be reset by pressing the reset button.

Changing the battery:

- Disconnect the 230 V voltage supply.
- Change the battery (article number *Batt 0,8A).

Trouble-shooting

Emergency button NO

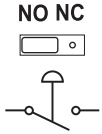

Emergency button NC

The telephone beeps every 5 seconds.

This is to notify the passengers of the ongoing call (anti eaves dropping)

The unit makes an alarm call when powered up.

- Improper type of emergency button selected. Change from NC to NO or from NO to NC.
- Emergency button is stuck.

No sound transmitted from the lift car to the call receiver.

Connect a normal phone (e.g. Comphone) to the plug on the main unit and make a call to the car (press "1"). If the sound transmission is OK in both directions, check if your emergency operator supports the chosen alarm type. If no protocol is used, change the call type to "VOICE". If no sound is transmitted from the lift car, check the polarity of the microphone wiring.

Poor/distorted sound quality.

Volume might be set too loud! Lower the volume and check again.

Interfering noise when the call is connected

If the main unit is installed on the car roof, the problem might be due to induction in the phone cable. According to the phone companies' regulations, the phone line must be installed in a separate cable.

GSM noise.

Change the antenna position when a call is connected until you find the optimal antenna position. Do not install the antenna near the main unit or close to the cabelling.

Can not dial out

- Broken line connection. (LED 3 not blinking green)
- No money on refill SIM-card, verify the SIM-card by inserting it into a normal mobile phone.

No voice switching

- The volume is set too high.
- If the main unit is installed on the car roof, the problem might be due to induction in the phone cable.

The unit can not make an alarm call.

At least one phone number (and one ID code if using data identification) must be programmed to enable making a call from the unit. Refer to the parameter list (*11*).

EU Declaration of Conformity

Product:	Lift telephone
Type / model:	**Safeline TTR**
Article no:	*TTR, *TTR-GSM, *TTR-4G
Manufacturer:	SafeLine Sweden AB
Year:	2017

We herewith declare under our sole responsibility as manufacturer that the products referred to above complies with the following EC Directives:

Directives

Electro Magnetic Comp. (EMC)	2014/30/EU (For line based versions)
Low Voltage (LVD):	2014/35/EU (For line based versions)
Radio Equipment (RED):	2014/53/EU (For GSM based versions)
RoHS 2:	2011/65/EU

Standards applied

EN 81-20:2014	Lift: Safety & Technical requirements
EN 81-28:2003	Lift: Remote alarm on passenger and goods passenger lifts
EN 12015:2014	EMC: Emission, Electromagnetic compatibility
EN 12016:2013	EMC/Lifts: Immunity, Electromagnetic compatibility
EN 62368-1:2014/AC:2015	LVD: Information Technology Equipment
EN 50581:2012	RoHS: Technical doc. for assessment of restriction of RoHS.

For RED 2014/53/EU, the conformity assessment procedure "Module A" used as described in Annex II. Accordingly, respective manufacturer has done the radio modules conformity assessment:

Standards applied	Article of Directive 2014/53/EU
EN 60950-1:2006+A11:2009+A1:2010+A12:2011+A2:2013	3.1 (a): Health and safety of the user
EN 62311:2008	
EN 301 489-1 v2.1.1 + EN 301 489-52v1.1.0 Draft	3.1 (b): Electromagnetic Compatibility
EN 301 511 v12.5.1	3.2: Effective use of spectrum allocated

Module	Notified body	Address	NB nr	Test nr
GL865-Dual V3	Dekra Test &Cert	Parque Tecnologico de Andalucia / SeveroOchoa 2, 29590 Spain	1909	53051 RBN.001

Firmware used during assessment

GL865-Dual V3:	16.00.152 / 16.01.150 / 16.01.153
SafeLine SL3000	2.20

Tyresö, 2020-09-10

Lars Gustafsson,
Technical Manager, R&D , SafeLine Group

SafeLine Headquarters
Antennvägen 10 · 135 48 Tyresö · Sweden
Tel.: +46 (0)8 447 79 32 · info@safeline.se
Support: +46 (0)8 448 73 90

SafeLine Denmark
Vallensbækvej 20A, 2. th · 2605 Brøndby · Denmark
Tel.: +45 44 91 32 72 · info-dk@safeline.se

SafeLine Norway
Solbråveien 49 · 1383 Asker · Norway
Tel.: +47 94 14 14 49 · post@safeline.no

SafeLine Europe
Industrieterrein 1-8 · 3290 Diest · Belgium
Tel.: +32 (0)13 664 662 · info@safeline.eu
Support: +32 (0)4 85 89 08 95

SafeLine Deutschland GmbH
Kurzgewannstraße 3 · D-68526 Ladenburg · Germany
Tel./Support: +49 (0)6203 840 60 03 · sld@safeline.eu

SafeLine Group UK
Unit 47 · Acorn Industrial Park · Crayford ·
Kent · DA1 4AL · United Kingdom
Tel.: +44 (0) 1322 52 13 96 · info@safeline-group.uk

www.safeline-group.com